4.95

1973 MUSTANG

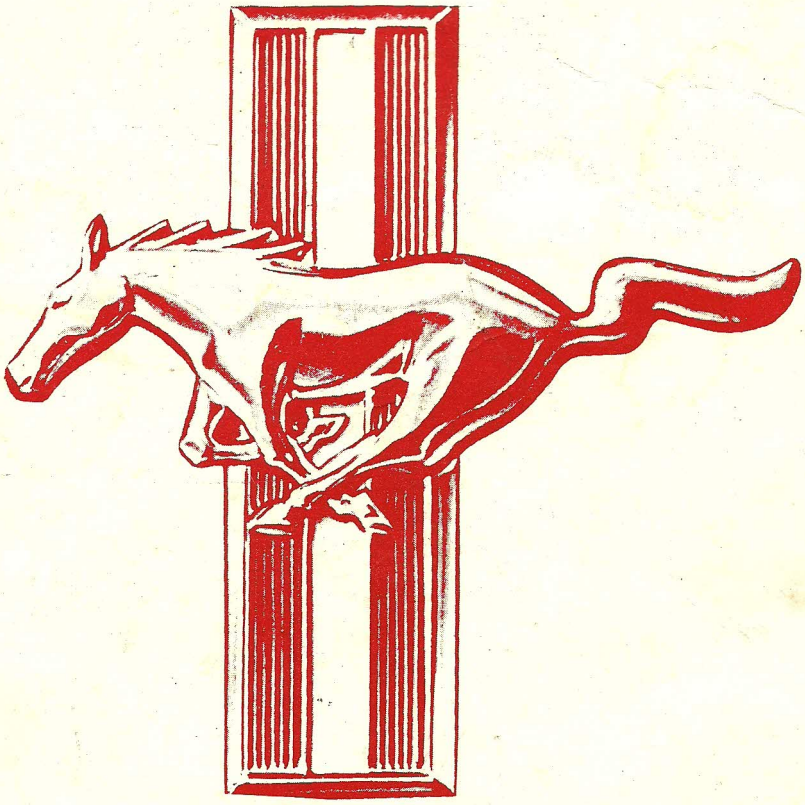

WIRING DIAGRAM MANUAL

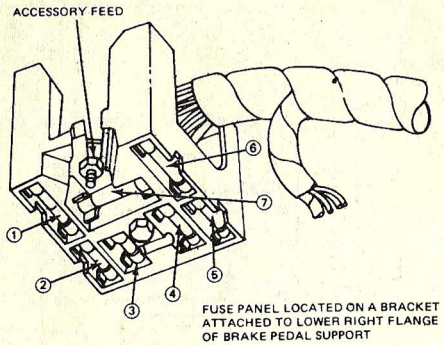

Fuse Panel—Mustang

①	(20 AMP. FUSE)	HORNS AND CIGAR LIGHTER
②	(14 AMP. FUSE)	COURTESY, DOME OR C-PILLAR, MAP, LUGGAGE AND GLOVE COMPARTMENT LIGHTS, AUTOMATIC SEAT BACK LATCH RELAY COIL FEED, CLOCK FEED, IGNITION KEY WARNING AND HEAD LIGHTS ON BUZZER.
③	(4 AMP. FUSE)	INSTRUMENT PANEL AND CLUSTER ILLUMINATION – ASH TRAY, CLOCK, RADIO, WINDSHIELD WIPER- WASHER SWITCH, HEATER CONTROL, HEADLIGHT SWITCH, CIGAR LIGHTER AND GAGE ILLUMINATION.
④	(14 AMP. FUSE)	INDICATOR LIGHTS – OIL PRESSURE, ENGINE WATER TEMPERATURE, DUAL BRAKE SYSTEM, SEAT BELT WARNING LAMP AND BUZZER, EMISSION CONTROL SOLENOIDS, THROTTLE SOLENOID POSITIONER, ELECTRONIC SPARK CONTROL.
⑤	(14 AMP. FUSE) (30 AMP. FUSE)	HEATER-DEFROSTER FOR AIR CONDITIONER
⑥	(15 AMP. FUSE)	BACK-UP LIGHTS, RADIO AND STEREO TAPE PLAYER, WINDSHIELD WASHER AND TURN SIGNAL SYSTEM.
⑦	(20 AMP. FUSE)	(ACCESSORY FEED) PARKING BRAKE WARNING LAMP, POWER WINDOW AND HEATED REAR WINDOW RELAY COIL FEED.

COMPONENT GRID LOCATOR

	ZONE LOCATION
A/C Clutch Solenoid	F70
Alternator	A1
Alternator Regulator	F1
Ammeter	A3
Automatic Seat Back Latch Solenoid	E47, E48
Battery	C5
Blower Motor Resistor	E69, E71
Cigar Lighter	C32
Clock	D31
Cluster Clock	B37
Constant Voltage Unit	F19
Distributors:	
6 Cylinder 250 C.I.D.	D3
8 Cylinder 302 C.I.D.	E3
8 Cylinder 351 C.I.D.	F3
Electric Choke	E5
Emission Systems:	
Ambient Temp. Sensor Switch	C84
E.G.R. Cutout Solenoid	C87
Spark Vacuum Module Solenoid	E87
Spark Delay Valve Bypass Solenoid	E88
E.G.R. Control Module	A85
Speed Sensor	C85
Transmission Regulator Spark Control Solenoid	E85
T.R.S. Switch	F86
Throttle Positioner Solenoid	C88
Flashers:	
Emergency Warning	E34
Turn Signal	B34
Gauges:	
Engine Temperature	F10
Fuel	C20
Oil Pressure	F12
Tachometer	B11
Heated Backlite	E52
Horns	E31, E32

	ZONE LOCATION
Ignition Coil	F6
Illumination Lamps:	
Cigar	F26
Clock	D30
Gauge	D29
Headlamp Switch	F27
Heater Switch	F25
Instrument Cluster	F29
PRNDL	E35
Windshield Washer Switch	F26
Immersion Heater	D55
Indicators:	
Alternator Warning	E9
Dual Brake Warning	F14
Engine Temp. Warning	F14
Heated Backlite On	E51
Hi Beam	B37
Oil Pressure	F13
Parking Brake Warning	C46
Seat Belt Warning	D21
Turn Signal	
L.H.	B36
R.H.	C36
Key Reminder Buzzer	C41
Junction Block	C3
Lamps:	
Backup	
L.H.	F23
R.H.	F24
Courtesy	E42, E43
Dome	D40
Engine Compartment	C7
Glove Box	E4
Headlamps	
L.H.	E37
R.H.	E36
License	F40
Map	B45
Park and Turn Front	
L.H.	F33
R.H.	F35

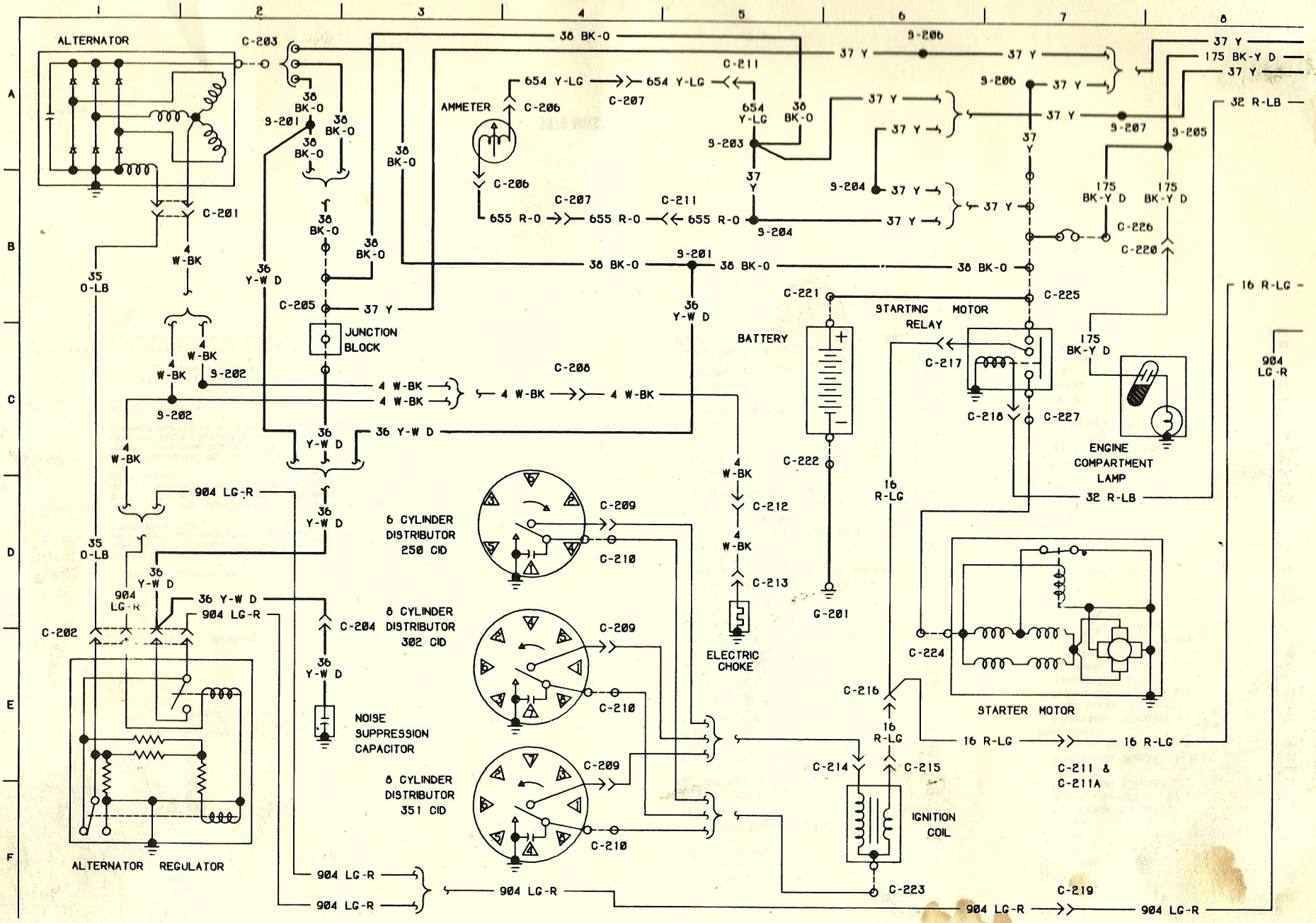

1973 MUSTANG

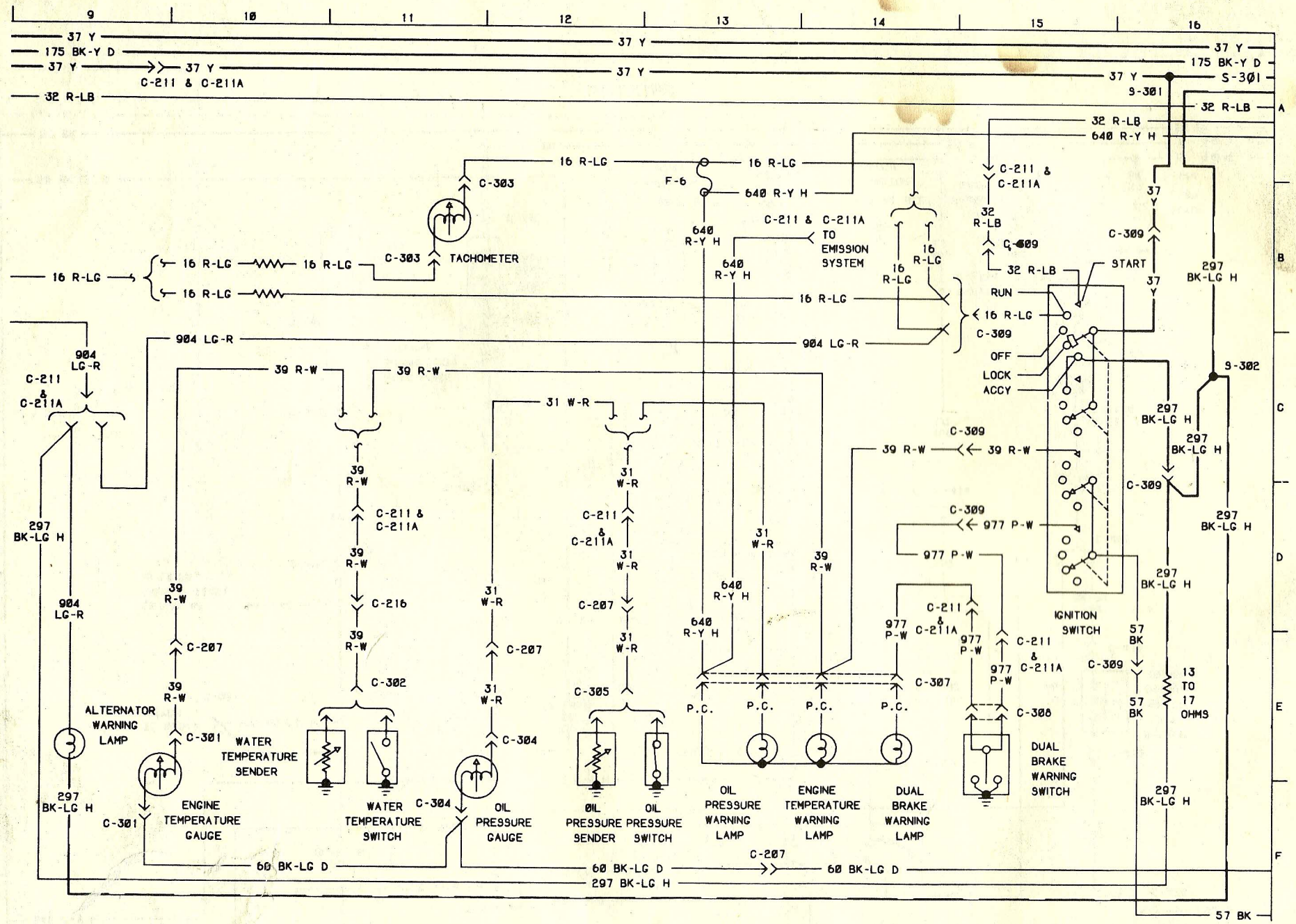

1973 MUSTANG

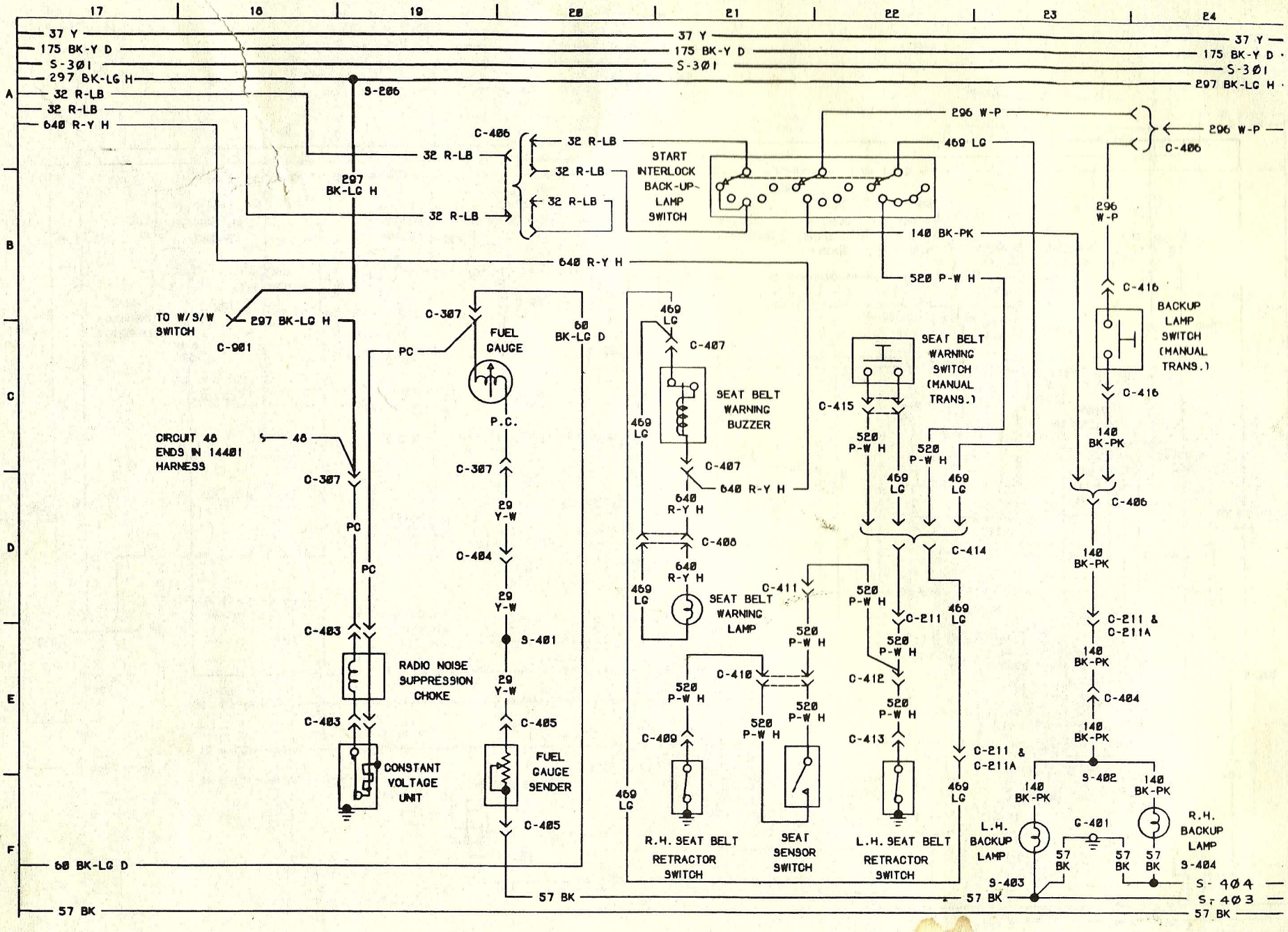

1973 MUSTANG

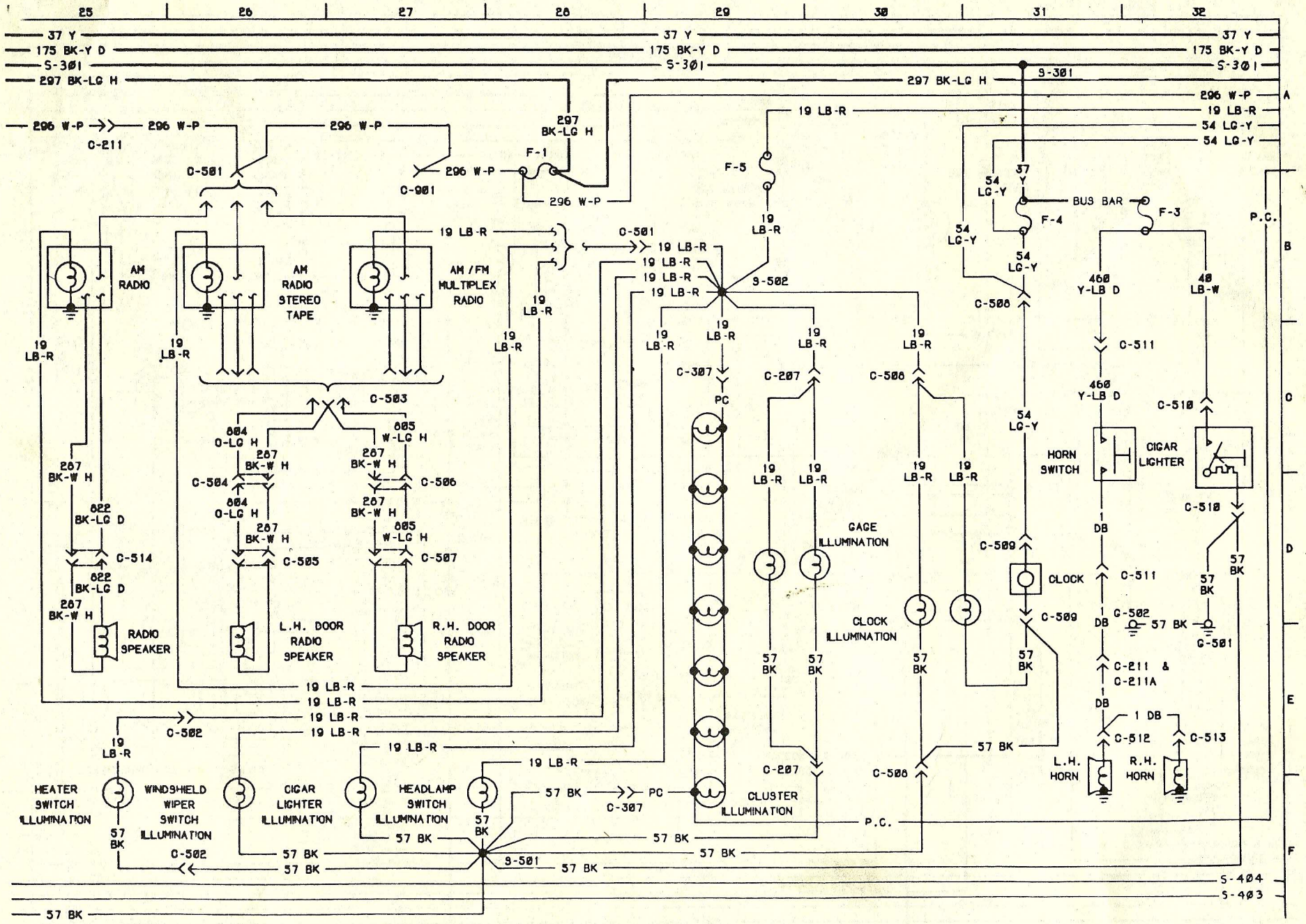

1973 MUSTANG

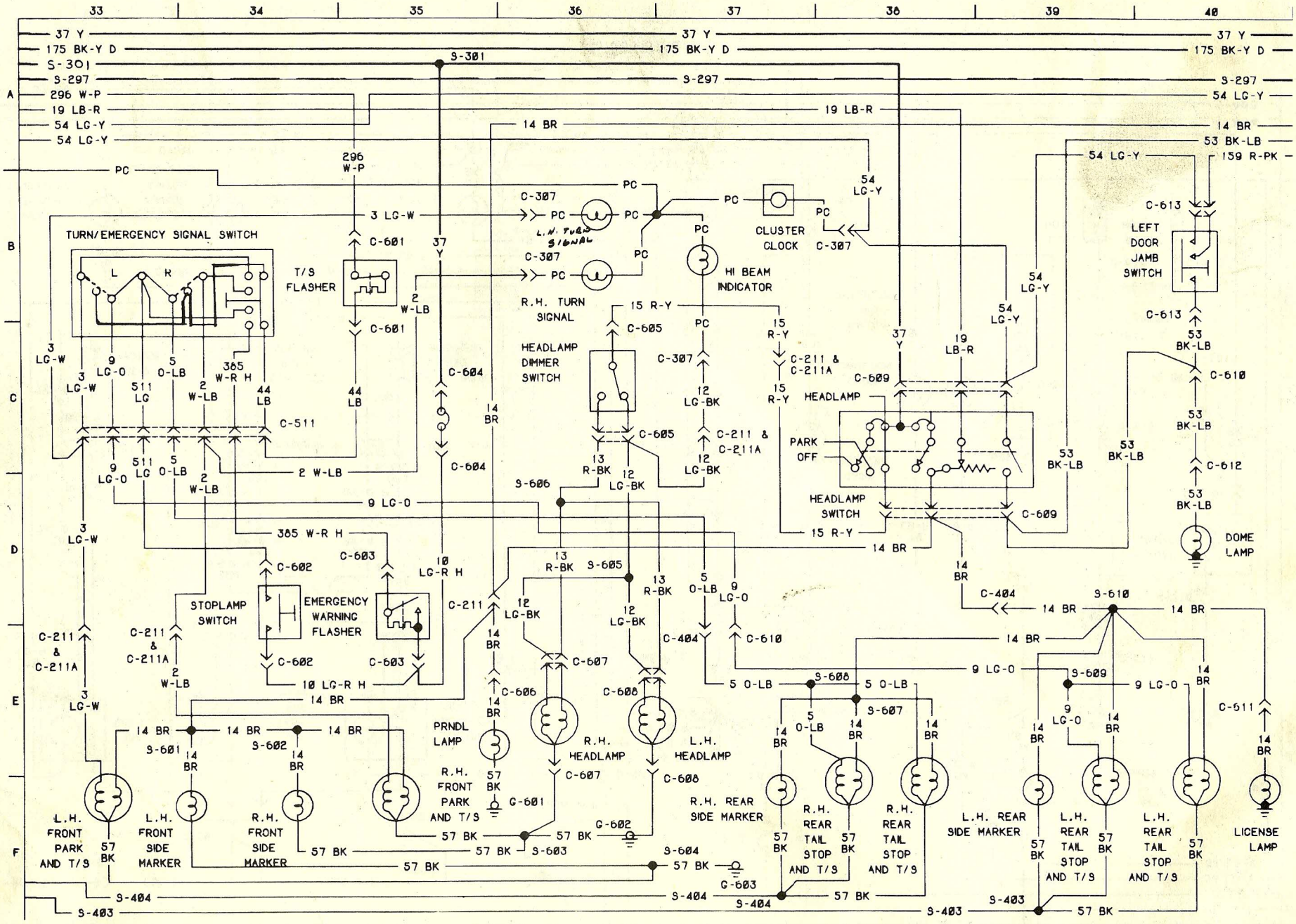

1973 MUSTANG

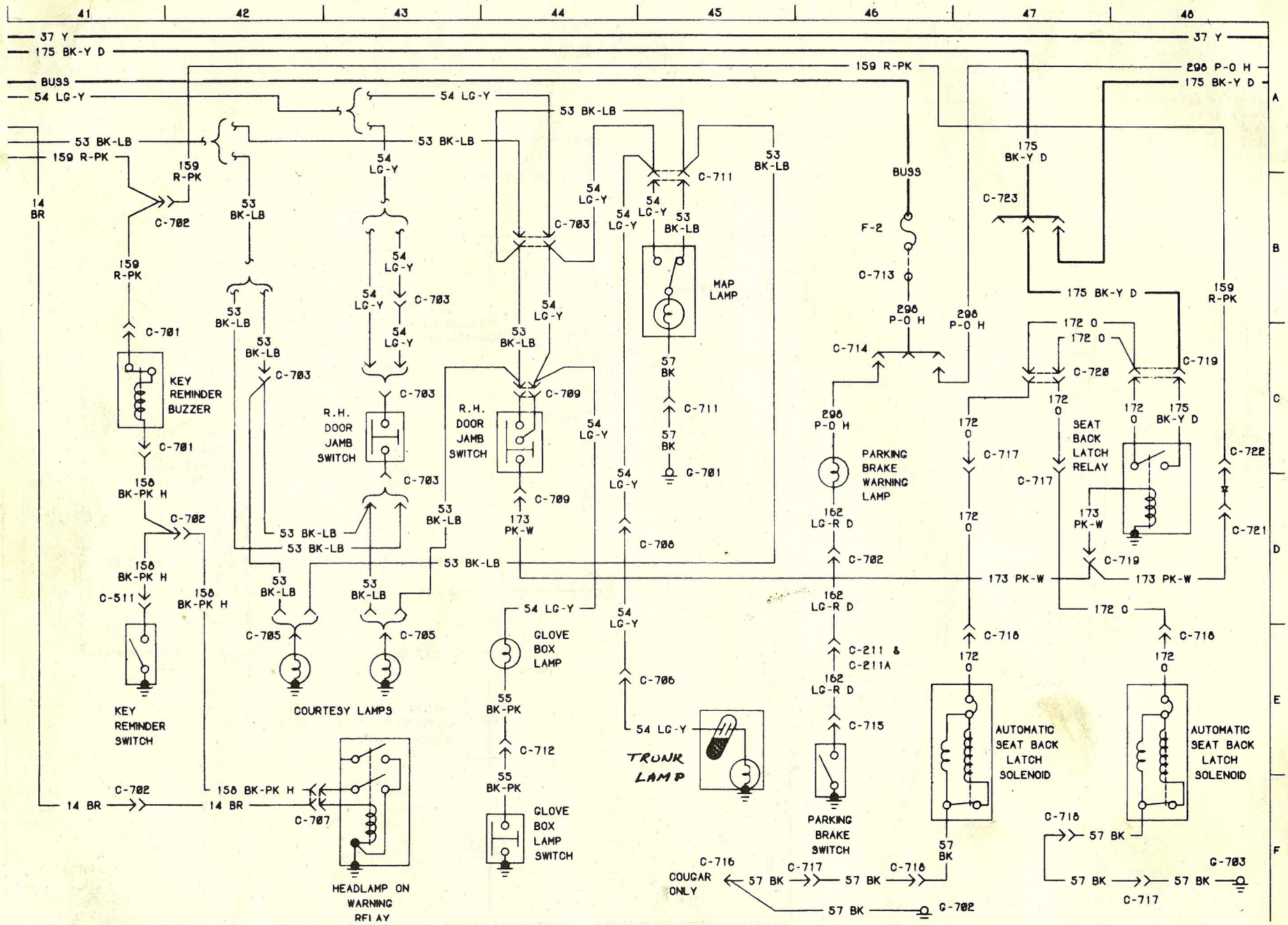

1973 MUSTANG

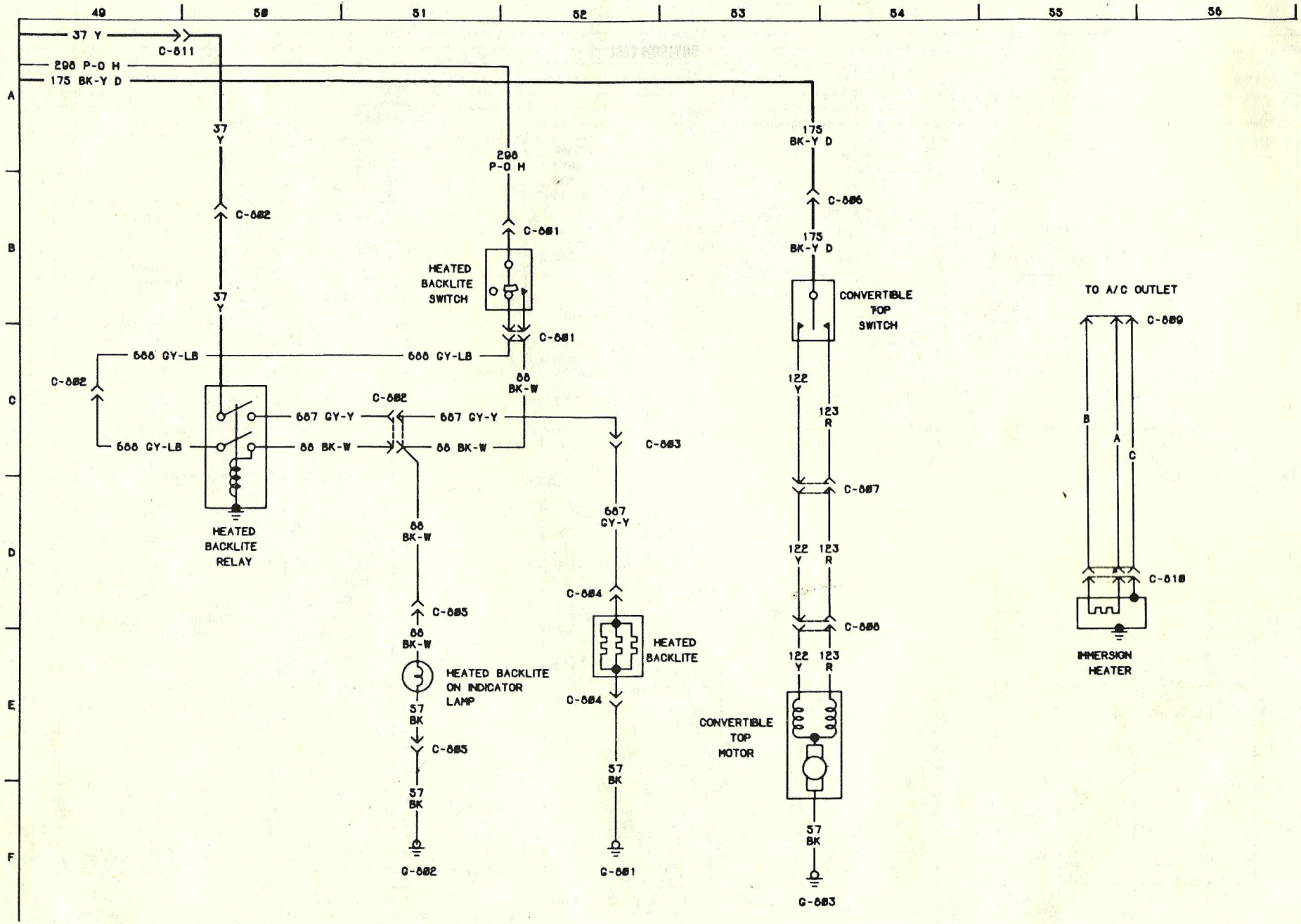

1973 MUSTANG

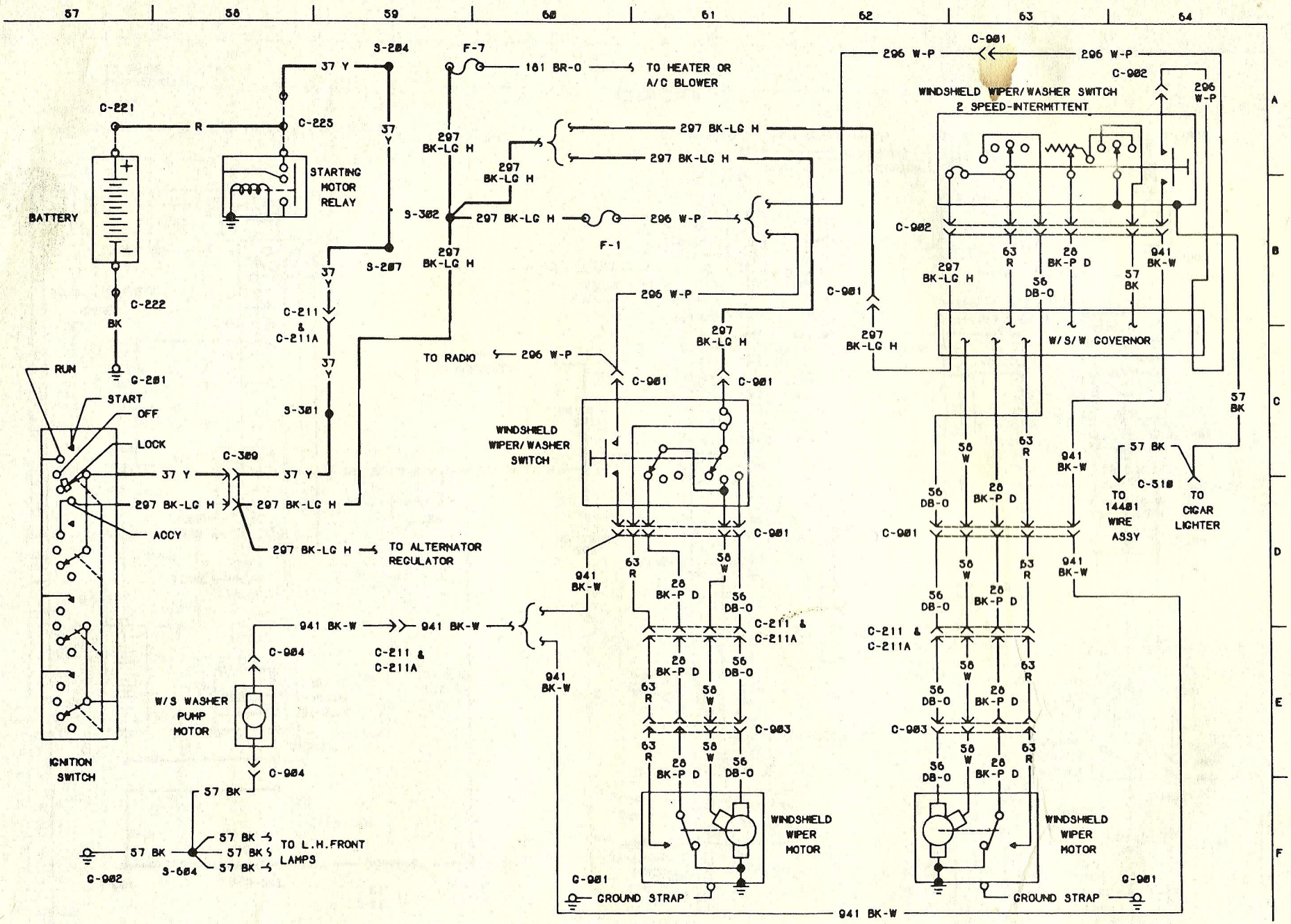

1973 MUSTANG

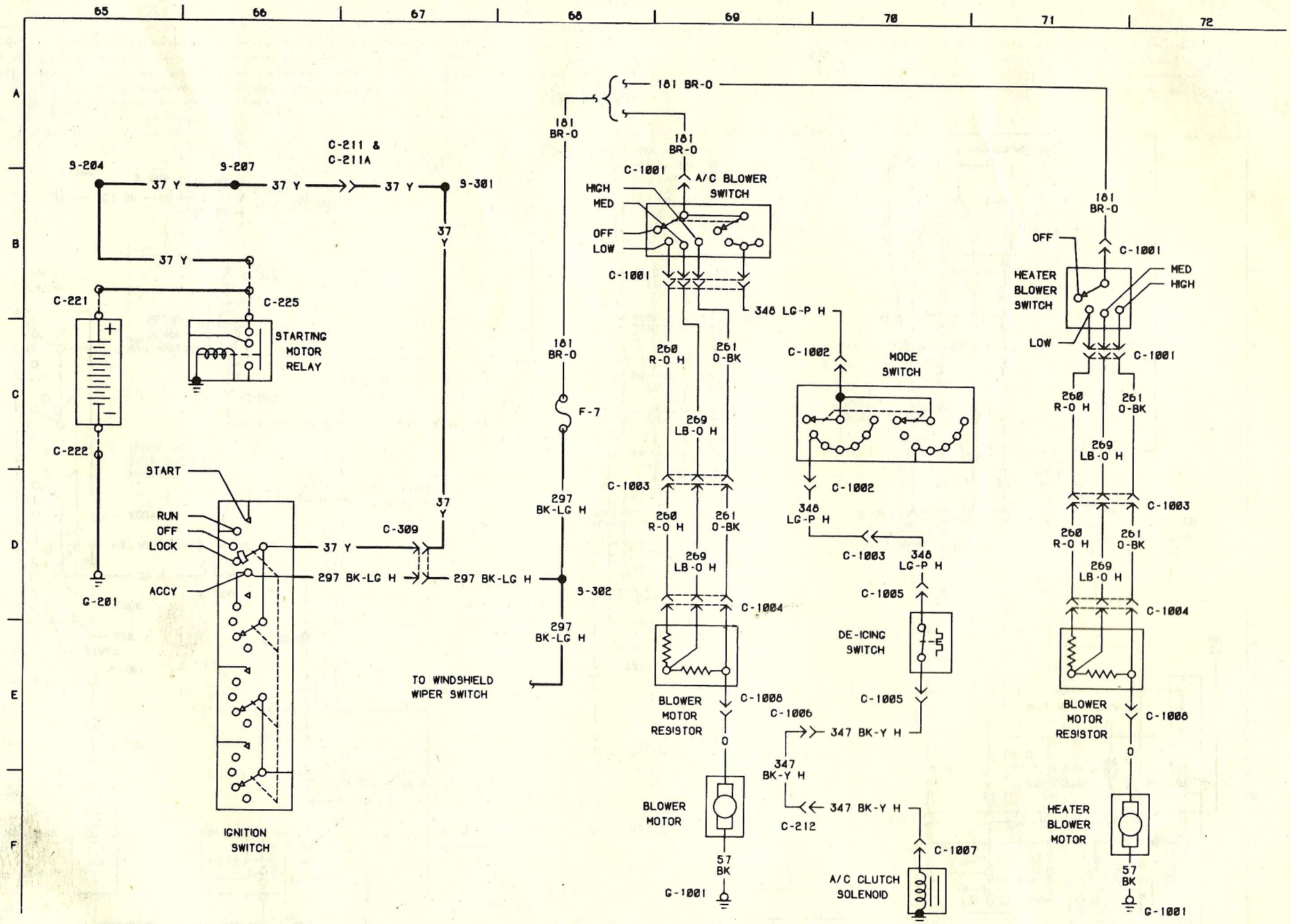

1973 MUSTANG

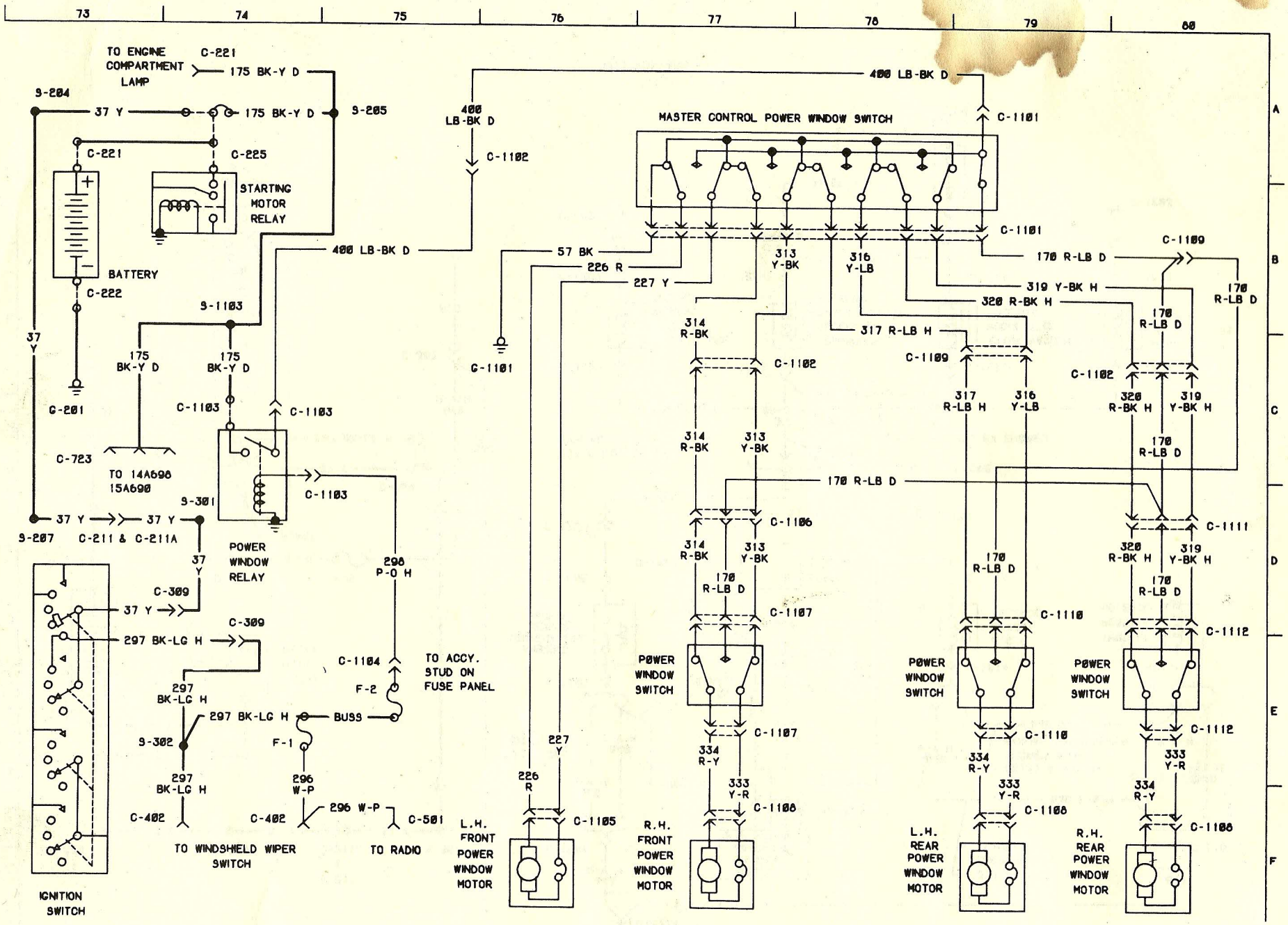

1973 MUSTANG

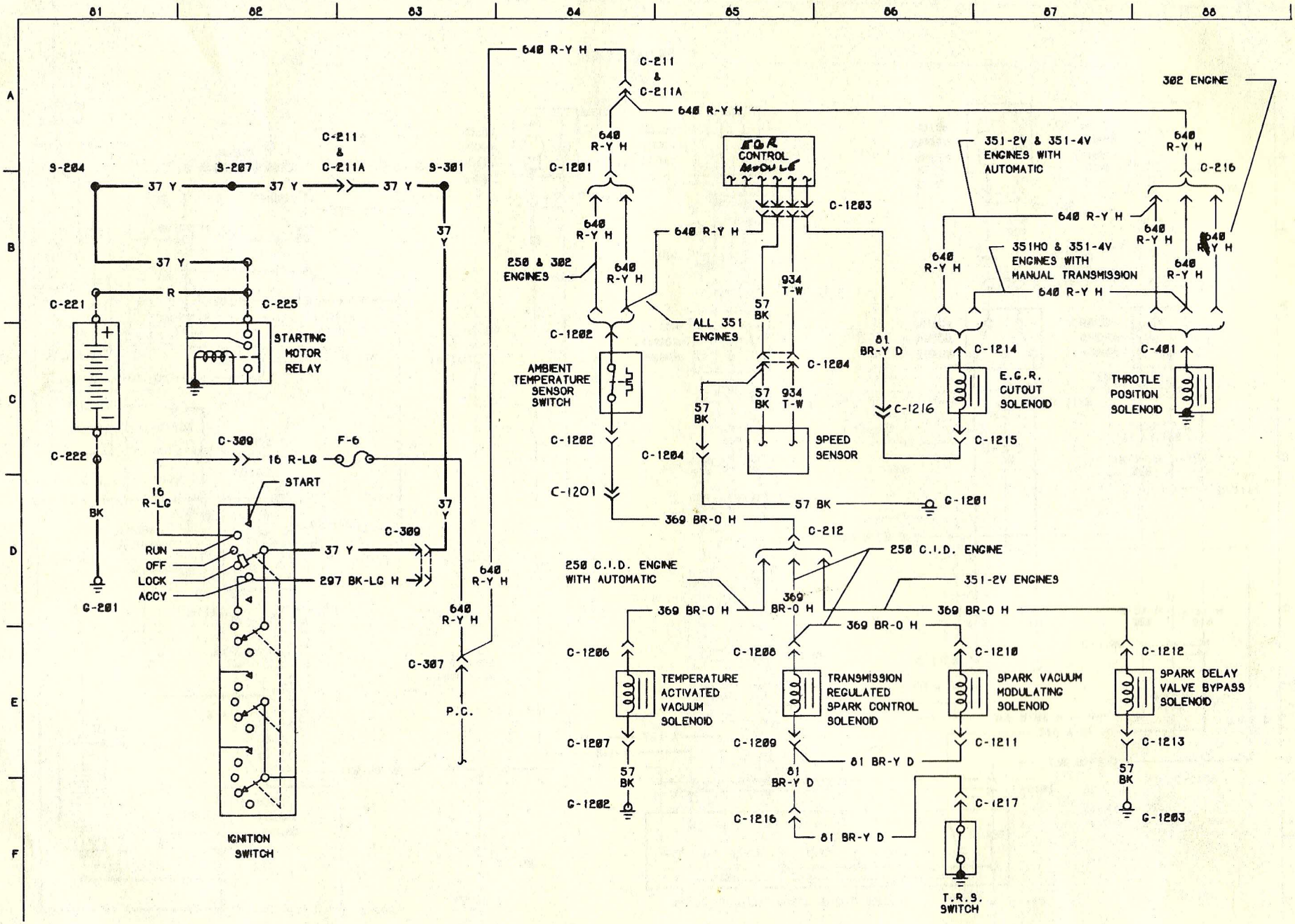

1973 MUSTANG