# 91-93 EEC Pinout
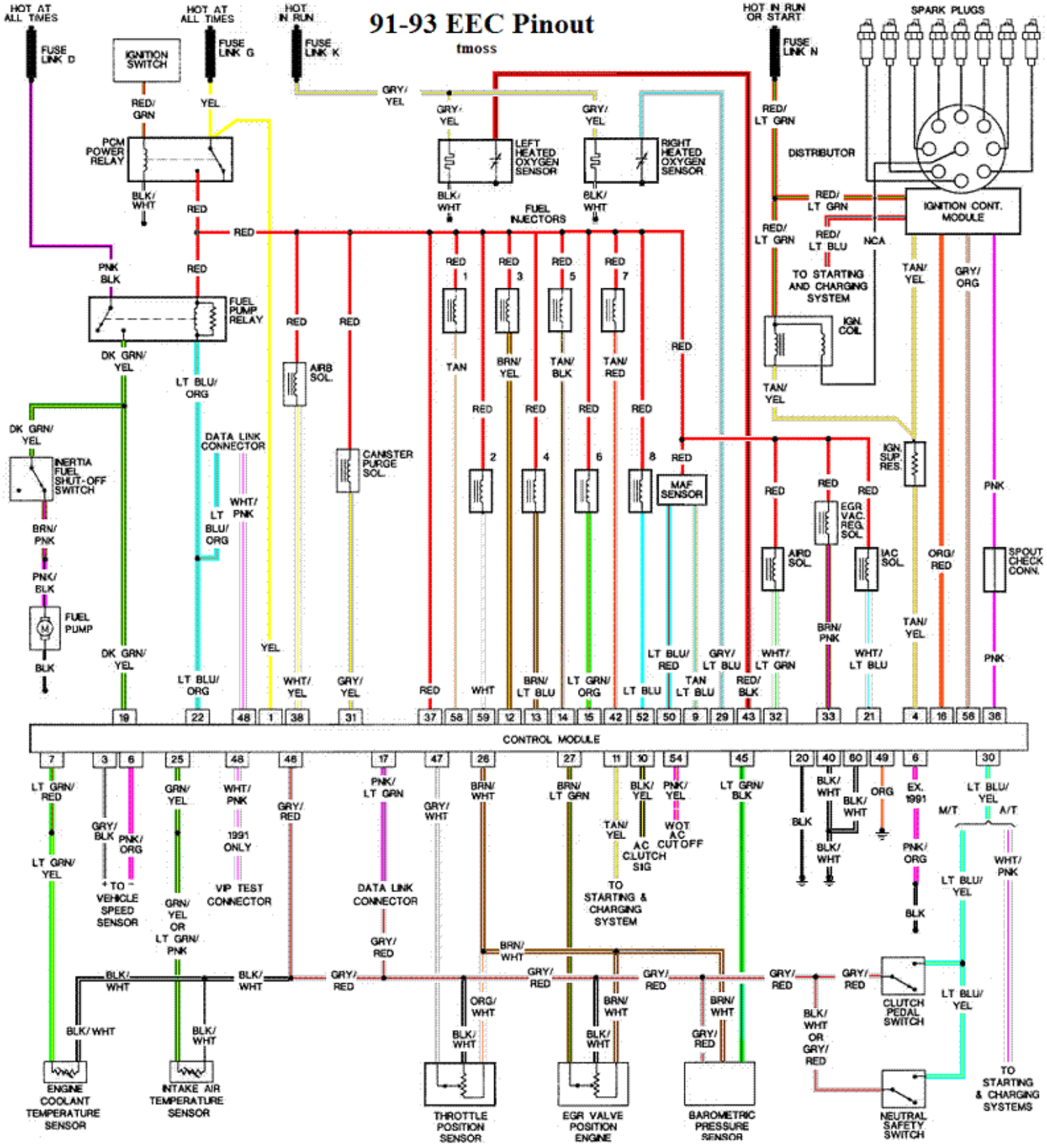
tmoss