-1

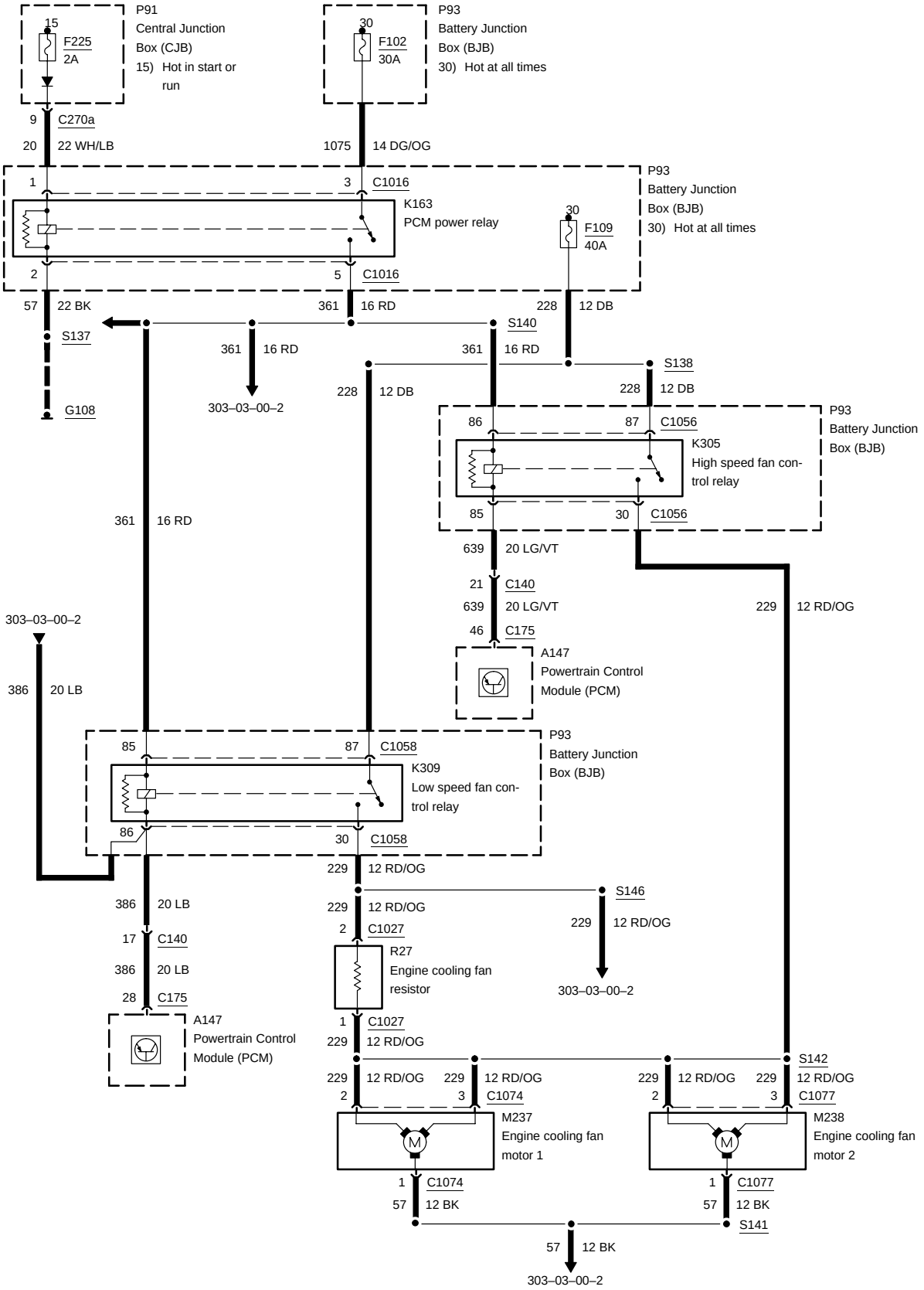
P91
Central Junction
Box (CJB)
15) Hot in start or
run
15
F225
2A
P93
Battery Junction
Box (BJB)
30) Hot at all times
30
F102
30A
9
C270a
20
22 WH/LB
1075
14 DG/OG
1
3
C1016
K163
PCM power relay
30
F109
40A
2
5
C1016
57
22 BK
361
16 RD
228
12 DB
S137
S140
361
16 RD
361
16 RD
S138
228
12 DB
228
12 DB
G108
303–03–00–2
86
87
C1056
K305
High speed fan con-
trol relay
85
30
C1056
361
16 RD
639
20 LG/VT
21
C140
639
20 LG/VT
229
12 RD/OG
46
C175
303–03–00–2
A147
Powertrain Control
Module (PCM)
386
20 LB
85
87
C1058
K309
Low speed fan con-
trol relay
86
30
C1058
229
12 RD/OG
S146
386
20 LB
229
12 RD/OG
229
12 RD/OG
2
C1027
17
C140
R27
Engine cooling fan
resistor
386
20 LB
28
C175
303–03–00–2
A147
Powertrain Control
Module (PCM)
1
C1027
229
12 RD/OG
S142
229
12 RD/OG
229
12 RD/OG
2
3
C1074
229
12 RD/OG
229
12 RD/OG
2
3
C1077
M237
Engine cooling fan
motor 1
M238
Engine cooling fan
motor 2
1
C1074
57
12 BK
1
C1077
57
12 BK
S141
57
12 BK
303–03–00–2